Sigma Publishing

Computer Communication Study Guide Series Books

By - Prof.: D. R. LUHAR

Topic - 1200

Introduction to Public Switched Telephone Networks (PSTNs)

POTS, ISDN, DLC, DSL, and PON Technologies, Systems and Services

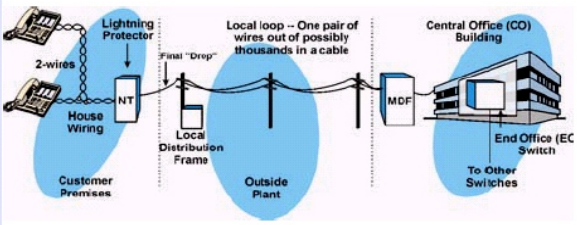

PSTN Local Loop

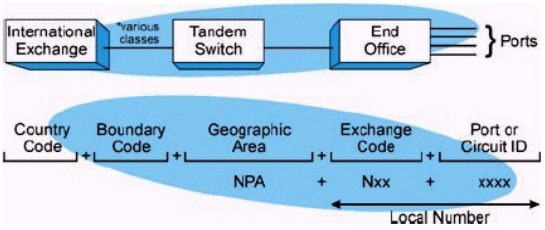

Telephone Numbering Plan

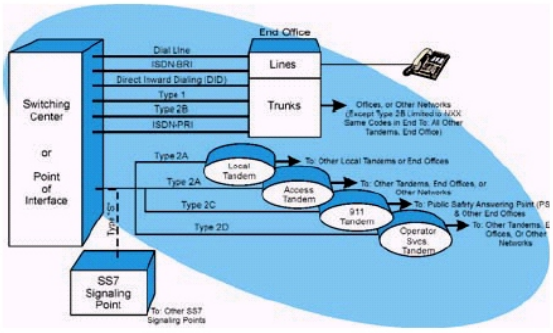

Interconnection Options

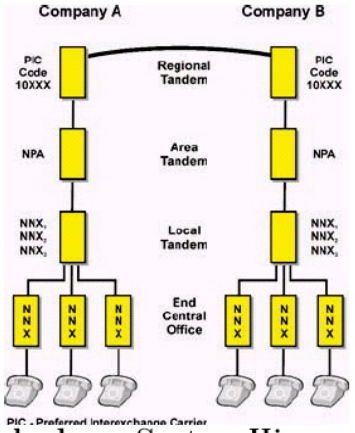

Telephone System Hierarchy

SIGMA TRAINING INSTITUTE
Basement, Hindola Complex,
Lad-Society Road, Near Vastrapur Lake,
Vastrapur,
AHMEDABAD-380 015. INDIA

Phone 079-26852427
Fax 079-26840290

E-mail info@sigmatrg.com
Website www.sigmatrg.com

Price Rs. 200/-

Table of Contents

Introduction to Public Switched Telephone Networks (PSTNs)

Public switched telephone networks are communication systems that are available to the public to allow users to interconnect communication devices. Public telephone networks within countries and regions are standard integrated systems of transmission and switching facilities, signaling processors, and associated operations support systems that allow communication devices to communicate with each other when they operate.

Figure 1.1 shows a basic overview of the Public Switched Telephone Network (PSTN) as deployed in a typical metropolitan area. PSTN customers connect to the end-office (EO) for telecommunications services. The EO processes the customer service request locally or passes it off to the appropriate end or tandem office. As Different levels of switches interconnect the parts of the PSTN system, lower-level switches are used to connect end-users (telephones) directly to other end-users in a specific geographic area. Higher-level switches are used to interconnect lower level switches.

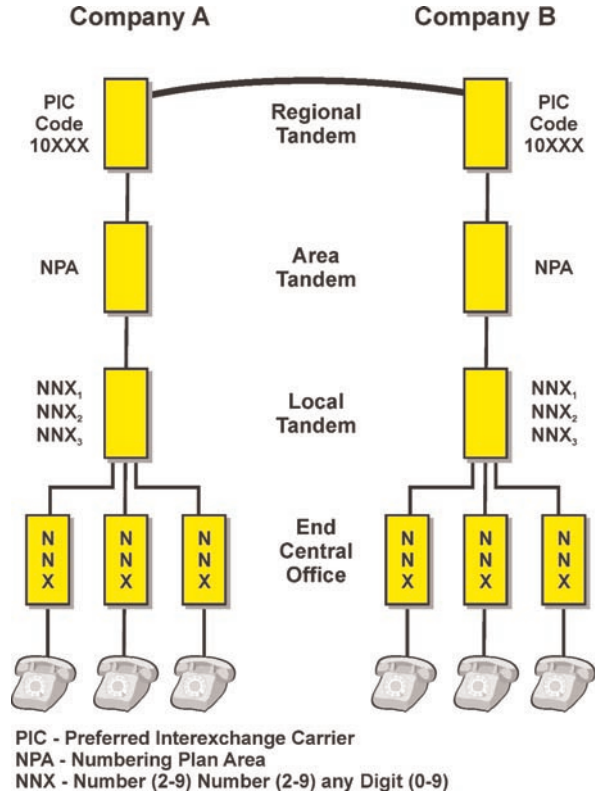

Figure 1.1, Public Switched Telephone Network (PSTN)

Switches within the PSTN send control messages to each other, usually through a separate control-signaling network called signaling system number 7 (SS7). The SS7 network is composed of signaling transfer points (STPs) and service control point (SCP) databases. A STP is used to route packets of control messages through the network. SCP's are databases that are used by the network to process or reroute calls through the network (such as 800 number toll free call routing). SS7 also provides for the newer features such as incoming call identification and automatic call rerouting used by some service companies that provide 24/7, worldwide dial-in support.

Overview

Public telephone networks include local loops (access lines), switching systems, transmission systems, databases (such as numbering plans) and call processing software and hardware (computers). These systems are centrally coordinated by network management systems.

Post, telephone, and telegraph (PTT) and local exchange carriers (LEC's) are the established telephone network operators or companies that provide local telecommunications services. For some countries, PTTs are government operated telephone systems. In the United States, LEC's are granted franchises to provide telephone services to certain geographical areas as mandated by the Federal Communication Commission (FCC). Recently, deregulation and privatization of telecommunication systems worldwide have allowed the creation of new competing local exchange carriers (CLECs). CLEC's provide similar services as LEC's and PTTs. In some cases, CLECs provide services by leasing existing lines from incumbent local exchange carriers (ILECs) and reselling services on these lines. In other cases, CLECs install new communication lines or provide connection by wireless service.

Local Loop

The local loop is the connection (wireless or wired) between a customer's telephone or data equipment and a LEC or other telephone service provider. Traditionally, the local loop (also called "outside plant" or the "last mile") has been composed of copper wires that extend from the EO switch. The EO is the last switching office in the telephone network that connects customers to the telephone network.

The EO switch cables meet the copper (or other types of lines) at the main distribution frame (MDF). The MDF is a wiring rack that allows technicians to splice the local loop lines with the lines from the switching system. Local loop lines leave the MDF in bundles (possibly thousands of wires in each bundle) and arrive in other junction points such as local distribution frames (LDF). The LDF allows the connection of the final connection (the "drop") to

the business or residence. At the entry to the customer's location, there is often a network termination (NT) device that isolates the telephone network from the wiring inside the customers building.

Figure 1.2 depicts a traditional local loop distribution system. This diagram shows a central office (CO) building that contains an EO switch. The EO switch is connected to the MDF splice box. The MDF connects the switch to bundles of cables in the "outside plant" distribution network. These bundles of cables periodically are connected to local distribution frames (LDFs). The LDFs allow connection of the final cable (called the "drop") that connects to the house or building. A NT block isolates the inside wiring from the telephone system. Twisted pair wiring is usually looped through the home or building to provide several telephone connection points, or jacks, so telephones can connect to the telephone system.

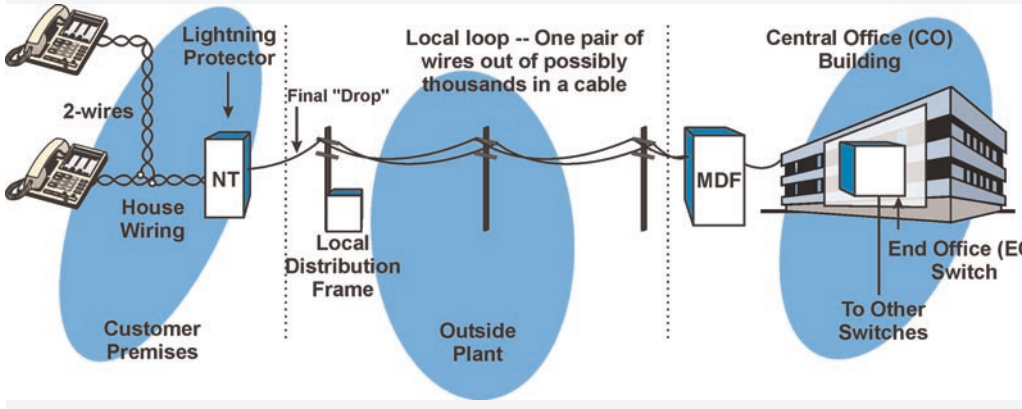

Figure 1.2, Local Loop

Switching Systems

Switching systems are assemblies of equipment that setup, maintain, and disconnect connections between multiple communication lines. Switching systems are often classified by the type of network they are part of (e.g., packet or circuit switched) and by the methods that are used to control the switches. The term "switch" is sometimes used as a short name for switching system. Public telephone switching systems have many switches within their network. A typical switch can handle up to 10,000 communication lines each.

Early switches used mechanical levers (crossbars) to interconnect lines. Modern switches use computer systems to dynamically setup, maintain, and disconnect communication paths through one or more switches. True computer-based switching came about through the introduction of the electronic switching systems (ESS's). ESS EOs did not require a physical connection between incoming and outgoing circuits. Paths between the circuits consisted of temporary memory locations that allowed for the temporary storage of traffic. For an ESS system, a computer controls the assignment, storage, and retrieval of memory locations so that a portion of an incoming line (time slot) could be stored in temporary memory and retrieved for insertion to an outgoing line. This is called a time slot interchange (TSI) memory matrix. The switch control system maps specific time slots on an incoming communication line (e.g., DS3) to specific time slots on an outgoing communication line.

The public telephone network switching system architecture typically uses a distributed switching system that has a hierarchy structure of switching levels. The use of distributed switching systems allows calls in the same geographic area to be connected to each other by the nearest switching system. Centralized switching systems require that all calls be connected through a single switch, even if the switch was located a long distance away from the callers. The use of distributed network architecture PSTN systems also allows for reduced call processing requirements at each switch. Using a multilevel hierarchy structure for switching systems (such as local switched interconnected by long distance switches) allows switching to occur at lower

levels of switching unless the telephone call must pass between multiple switches. At that point, the call is passed up to a higher-level switch for transfer to more distant locations.

In conjunction with distributed network architecture, The U.S. telephone system is arranged in the hierarchy of serving offices. The offices are buildings where the switching equipment is located and they are so coordinated to effectively transition traffic through the network. In the competitive service arrangement in the U. S., multiple companies are connected through local companies and; a hierarchy of as many as four layers is used by serving telephone companies for the architecture of their network. The equipment office closest to the subscriber is called the "end central office". This central office is unique to a given NNX or exchange number for a given community so that the only way to terminate a phone call to a specific customer is through his serving end central office. Multiple end central offices are then connected to local tandems that facilitate connections between all other local and central offices in that community.

For calls outside the local tandem serving area, area tandems are employed and basically are best represented by area codes or NPAs for the dialing plans served by that telephone company. Then, if the concentration of traffic is large enough, a company may employ regional tandems as well. Regional tandems would be the interface point between other serving telephone companies for the purposes of connection and cross-connection to the other telephone companies.

Tandems can be duplicated to insure fault-tolerant routing of telephone calls but there is a glaring single point of failure that exists in the U.S. telecommunications network and that is the end central office. A telephone number and a specific telephone are served by only one end central office. Should there be equipment fault at that end central office serving that telephone customer he will lose all of his services until the matter is corrected. This telephone hierarchy should be integrated with a third complete paragraph starting with public telephone switching systems used and office telephone switches.

Transmission Systems

Transmission systems interconnect communication devices to each other by guiding signal energy in a particular direction or directions through a transmission medium such as copper, air, or glass. A transmission system will have at least one transmitting device, a transmission medium, and a receiving device. The transmitting communication devices is capable of converting information into form electrical, electromagnetic wave (radio), or optical signals that allows the information to be transferred through the medium. The receiving communication device converts the transmitted signal into another form that can be used by the device or other devices that are connected to it. Transmission systems can be unidirectional (one direction) or they can be bi-directional (two directions). Transmission systems can provide for a single channel on a single line (possibly an analog telephone line) or the transmission system may combine many communication channels onto a single communication line (such as a high-speed digital line).

Numbering Plan

A numbering plan is a system that identifies communication points within a communications network through the structured use of numbers. The structure of the numbers is divided to indicate specific regions or groups of users. It is important that all users connected to a telephone network agree on a specific numbering plan to be able to identify and route calls from one point to another.

Telephone numbering plans throughout the world and systems vary dramatically. In some countries, it is possible to dial using 5 digits and others require 10 digits. To uniquely identify every device that is connected to public telephone networks, the Comite Consultatif Internationale de Telegraphique et Telephonique (CCITT) devised a world numbering plan that provides codes for telephone access to each country. These are called country codes. Coupled with the national telephone number assigned to each subscriber in a country, the country code telephone makes that sub-

scribers number unique worldwide. The International Telecommunications Union (ITU) administers the World Numbering Plan standard E.164 publishes any new standards or modifications to existing standards on the Internet.

Each country defines its public telephone network numbering plans. The United States and Canada adopted the North American Numbering Plan (NANP) that allows the two countries to appear as one when dialing internally. Each country has a country code prescribed by the World Numbering Plan so they are accessed internationally as separate entities. The NANP is based on 10 digit numbering (NXX-NXX-XXXX). The number consists of a 3-digit area code, a 3-digit central office code, and a 4-digit line number. The first three digits (NXX) are the Numbering Plan Area (NPA) or area code. It is this 3-digit code that designates one of the numbering plan areas in the North American Numbering Plan for direct distance dialing. Originally, the format was N0/1X, where N is any digit 2 through 9 and X is any digit. From 1995 on, the acceptable format is NXX.

Figure 1.3 shows the world (telephone) numbering plan recommendation, "E.164" developed by the International Telecommunications Union (ITU). This diagram shows the numbering plan divides a telephone number into a country code (CC), national destination code (NDC), and subscriber number (SN) for telephone numbering. The CC consists of one, two or three digits and the first digit identifies the world zone. This diagram shows that the local number can be divided into an exchange code (end office switch identifier) and a port (or extension) code.

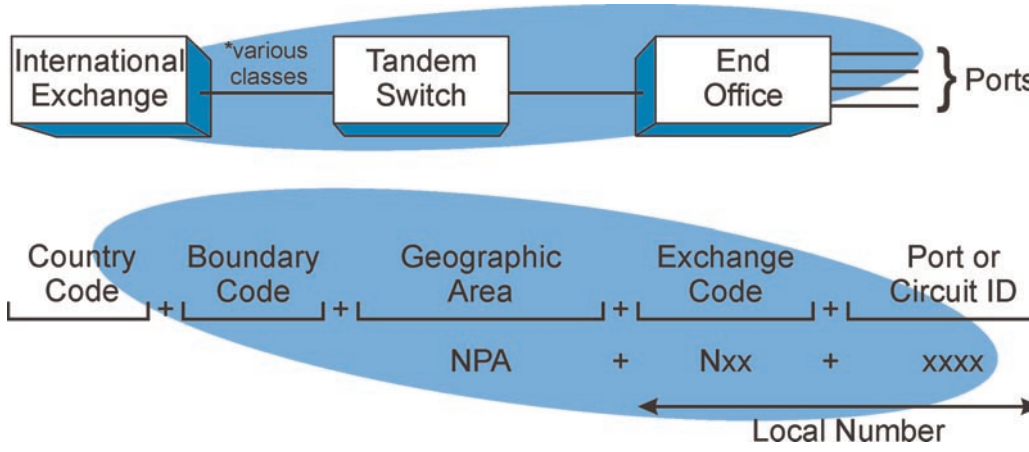

Figure 1.3, E.164 Telephone Numbering System

With the massive requirement for telephone numbers by cellular telephone and fax services, new area codes are being placed in service at an all time high rate. This is causing the telecommunications industry and standards bodies in North America to consider the implementation of "number portability". When this occurs each subscriber will be assigned telephone numbers permanently (e.g., all subscribers in North America will dial ten digits to make a local call and take their number with them when they move.)

Call Processing

Call processing is the steps that occur during the length of a call. These steps are typically associated with the routing and control of the call. When used as part of a telephone system, call processing involves gathering and processing information from various sources such as capturing the dialed digits entered by a user of a telephone or storing the connection information from a switching system that will be used for billing records. There may be many parts of the PSTN (software and hardware) that perform call processing functions including the switch that connects a telephone to a telephone number database (SCP) that can translate a toll free/freephone telephone number into a number of the destination telephone.

Market Growth

Between 1995 and 2002, the number of wired telephone lines in the world increased from 689 million to 1.1 billion [1]. While the number of new wired telephone lines continues to increase in developing nations, the growth of wired telephone lines in some countries are decreasing due to the increase in the number of wireless (mobile) telephone lines. Existing (incumbent) local telephone companies are also experiencing new competition. In the United States, of the 192 million telephone lines in use in 2002, 173 million were provided by LECs (~79%), 19.7 million were provided by CLECs (~20%), and 2.1 million were provided by cable-television/telephony (~1%) [2]. In mid 2000, telephone voice traffic (measured in minutes) on wired telephone systems began to decline for the first time [3].

Voice Service

Voice telephone service is any service or feature accessible through the LEC/CLEC or IXC that can be accessed via a standard analog or digital telephone lines. The key reasons for growth in the number of telephone lines include dial-up Internet access, fax telephone lines, and mobile telecommunications.

Figure 1.4 shows the growth of new telephone lines worldwide. This chart shows that telephone service subscribers continues to grow over 7% each year. The 1980s and early 1990s, the growth of telephone lines had been fairly level at about 50 million additional telephone lines per year. However, in the late 1990s, the number of new telephone lines added began to increase due to the need for advanced services such as fax machines and Internet access.

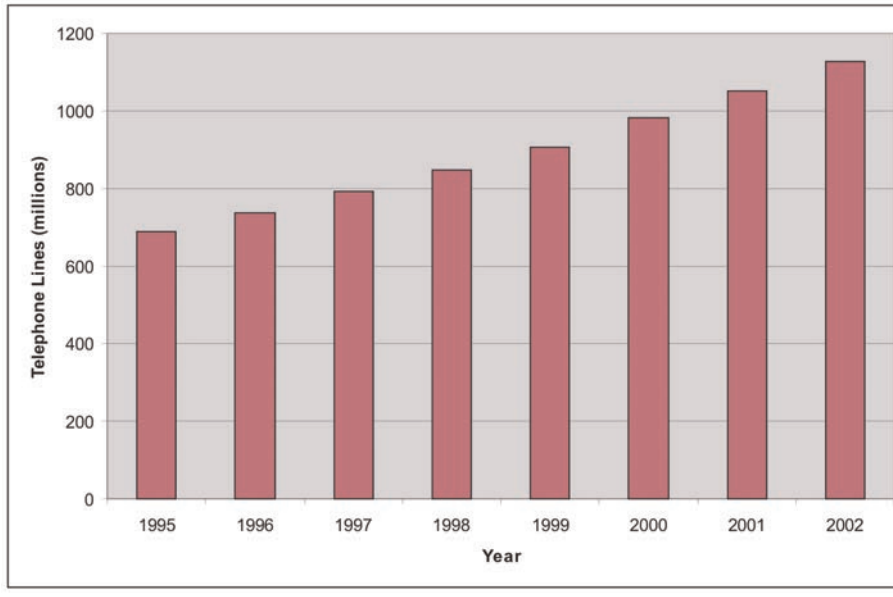

Figure 1.4, Worldwide Telephone Market Growth

Source: International Telecommunications Union

Data Service

Data service is the act of moving data through a network from one data source to another. Generally these sources are computers and they interface with the network via modems or channel service units (CSU's). Data transfers can occur over dialed voice connections or via dedicated lines such as DSL services and dedicated T1 services and over cable TV infrastructure.

In 2002, the number of customers that use the Internet was increasing at a rate of nearly 40% a year while data traffic on the Internet (amount of data per user) is expanding at a rate of over 100% per year. The amount of data that was transferred over the Internet in the United States in 2000 averaged 27,500 terabytes (1,000 billion bytes) per month [3]. The data transmission on private networks grew 500% between 1997 and 2000 with an average of 3,000 terabytes per month transferred in the United States [4].

Figure 1.5 shows the number of Internet users worldwide through 2004. This graph shows that the number of Internet users increased by almost 2500% (25 times) between 1995 and 2004 with an annual growth rate of between 25% and 80% each year.

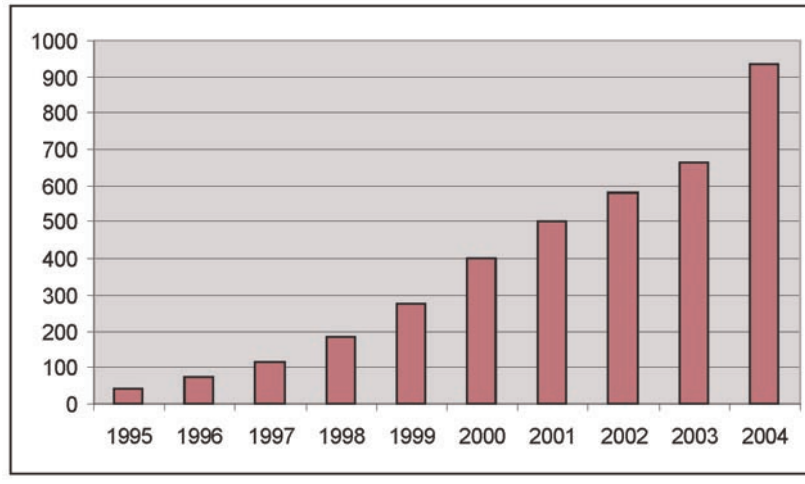

Figure 1.5, Internet Users Market Growth through 2004
Source: International Telecommunications Union and Computer Industry Almanac

Technologies

Some of the key technologies behind the operation of the public telephone network include interconnection lines, network common control signaling, and intelligent call processing. Several types of interconnection systems are used to provide access to different services and systems available through the PSTN. To coordinate the overall operation of the PSTN, a standard common control signaling (CCS) system is typically used. The use of intelligent call processing can combines the use of efficient high-speed interconnection lines with common control signaling to provide for advanced services such as call forwarding, telephone number portability, and prepaid services.

Public Telephone System Interconnection

There are many types of interconnection options available to connect public telephone systems to other public telephone networks or private telephone networks. The type of connection selected depends on the type of private system, telecommunications regulations, and the needs of the company that uses the private telephone system (e.g., advanced calling features). In addition to standard telephone system connection types, there are also private-line connections that may be used to link private branch exchange PBX systems together.

There are two types of connections that are used between switching systems: line side and trunk side. Line side connections are an interconnection line between the customer's equipment and the last switch EO in the telephone network. The line side connection isolates the customer's equipment from network signaling requirements. Line side connections are usually low capacity (one channel) lines. Trunk side connections are used to interconnect telephone network switching systems to each other. Trunk side connections are usually high capacity lines. Primary rate interfaces use out-of-band signaling in a dedicated signaling channel.

POTS (dial) Line Connections

POTS dial lines are 2-wire, basic line-side connections from an EO with limited signaling capability. Because dial lines are line-side connections, call setup time may be longer than those connections that employ trunk-side supervision.

Direct Inward Dialing (DID) Connections

Direct inward dialing (DID) connections are trunk-side (network side) EO connections. The network signaling on these 2-wire circuits is primarily limited to one-way, incoming service. DID connections employ different supervision and address pulsing signals than dial lines. Typically, DID connections use a form of loop supervision called reverse battery, which is common for one-way, trunk-side connections. Until recently, most DID trunks were equipped with either dial pulse (DP) or dual tone multifrequency (DTMF) address pulsing. While many wireless carriers would have preferred to use multifrequency (MF) address pulsing, a number of LEC's prohibited the use of MF on DID trunks.

Foreign Exchange Office (FXO)

Foreign exchange office (FXO) is an interface or channel unit that allows an analog connection (foreign exchange circuit) to be directed at the PSTN's central office or to a station interface on a PBX. The FXO sits on the switch end of the connection. It plugs directly into the line side of the switch so the switch thinks the FXO interface is a telephone. (See also: foreign exchange station.)

Foreign Exchange Station (FXS)

Foreign exchange station is a type of channel unit used at the subscriber station end of a foreign exchange circuit. A foreign exchange station (FXS) interface connects directly to a standard telephone, fax machine, or similar device and supplies ring, voltage, and dial tone. (See also: foreign exchange office.)

Type 1 Connections

Type 1 connections are trunk-side connections to an EO. The EO uses a trunk-side signaling protocol in conjunction with a feature known as Trunk With Line Treatment (TWLT). This connection was originally described in technical advisory 76 published by AT&T in 1981. This interconnection was developed because dial line and DID connections did not provide enough signaling information to allow the connection of public telephone networks to other types of networks (such as wireless and PBX networks). The switch must be equipped to provide TWLT, or its equivalent to offer Type 1 service. As a result, type 1 is not universally available. The TWLT feature allows the EO to combine some line-side and trunk-side features. For example, while trunk-side signaling protocols are used, the calls are recorded for billing purposes as if they were made by a line-side connection.

Type 1 connections are usually used as 2-way trunks. Two-way trunks are 4-wire circuits, meaning they have separate transmit and receive paths, and almost always use MF address pulsing and supervision. The address pulsing normally uses wink-start control. One-way Type 1 connections can be provided on a 2-wire basis using E&M supervision or reverse battery like the DID connection. T1 connections in a digital context are also provided and these are labeled as T1 services. These T1 services include in-band signaling as well as out-of-band signaling in the later described services of primary interface.

Integrated Services Digital Network - Basic Rate Interface Connections (ISDN-BRI)

ISDN-BRI connection provides two bearer channels, each using a 64 kbps digital channel, as well as a 16 kbps data link for signaling messages. This 144 kbps combination is referred to as 2B+D, which signifies two bearer channels and one data channel. The bearer channels provide the voice portion while the data channel is used to transfer SS7 signaling messages. EO switches must have an ISDN-BRI interface and software installed to supply this connection.

Integrated Services Digital Network - Primary Rate Interface Connections

Another variation of Type 1 is the Integrated Services Digital Network - Primary Rate Interface (ISDN-PRI). It has capabilities similar to the ISDN-BRI but employs 23 bearer channels and one signaling channel, or a 23B+D configuration. The ISDN-PRI interconnection is provided using a standard DS1-level interface that would normally provide the equivalent of 24 voice channels. It offers the same calling capabilities as noted for the Type 1 and ISDN-BRI connections. Primary rate interfaces use out-of-band signaling in a dedicated signaling channel.

Type 2A Connections

Type 2A connections are true trunk-side connections that employ trunk-side signaling protocols. Typically, they are two-way connections that are 4-wire circuits using E&M supervision with multifrequency (MF) address pulsing. The address pulsing is almost always under wink-start control. Type 2A connections allow the other public or private telephone network switching systems to connect to the PSTN and operate like any other EO.

Type 2A connections may restrict calls to specific NXX (exchange) codes and access to operator services (phone number directories, emergency calls, freephone/toll free) may not be permitted. For some interconnections, additional connections (such as a type 1) may be used to supplement the type 2A connection to allow access to other operator or network services.

Type 2B Connections

Type 2B connections are high usage trunk groups that are used between EOs within the same system. The type 2B connection can be used in conjunction with the Type 2A. When a type 2B is used, the first choice of routing is through a Type 2B with overflow through the type 2A. Because the type 2B connection is used for high usage connections, it can access only valid NXX codes of the EO providing that it is connected to. Type 2B connections are almost always 4-wire, two-way connections that use E&M supervision and multifrequency (MF) address pulsing.

Type 2C Connections

Type 2C connections were developed to allow direct connection to public safety centers (E911) via a tandem or local tandem switch. This interconnection type must provide additional information such as the return phone number (complicated on mobile telephone systems) and the location of the caller. This information is passed on to a public safety answering point (PSAP). In recent times primary rate interface has been a more popular connection for the purposes of enhanced 911 services and the appropriate public safety answering points. Because of the outer band signaling and the dedicated channel for signaling and the PRI connection has become more flexible and versatile to meet the needs of an enhanced 911 service offering.

Type 2D Connections

Type 2D interconnection lines allow direct connection from an operator services system (OSS) switch. The OSS switch is a special tandem that contains additional call processing capabilities that enables operator services special directory assistance services. The type 2D connection also forwards the automatic number identification information to allow proper billing records to be created. Type 2D connection will normally use trunks employing E&M signaling with wink start, and multifrequency (MF) address pulsing.

Type S Connections

Type S connections transfer signaling messages that are associated with other interconnection types (out-of-band signaling). The type S is a data link (e.g., 56 kbps) that is used to connect the signaling interfaces between switches. Type S connections permit additional features to be supported by the network such as finding and using call forwarding telephone numbers. Because type S connections cost money, some smaller public telephone networks do not offer or use type S connections.

Figure 1.6 illustrates some of the different types of private to public telephone system interconnection. This diagram shows some groups of phone lines (e.g., dial line, Type 1) that provide limited signaling information (line-side) that primarily interconnect the PSTN with private telephone systems. Another group of lines (Type 2 series) are used to interconnect switching systems or to connect to advanced services (such as operator services or public safety services). The interconnection lines (trunk-side) provide more signaling information. Also shown is the type S connection that is used exclusively for sending control signaling messages between switching system and the signaling system 7 (SS7) telephone control network.

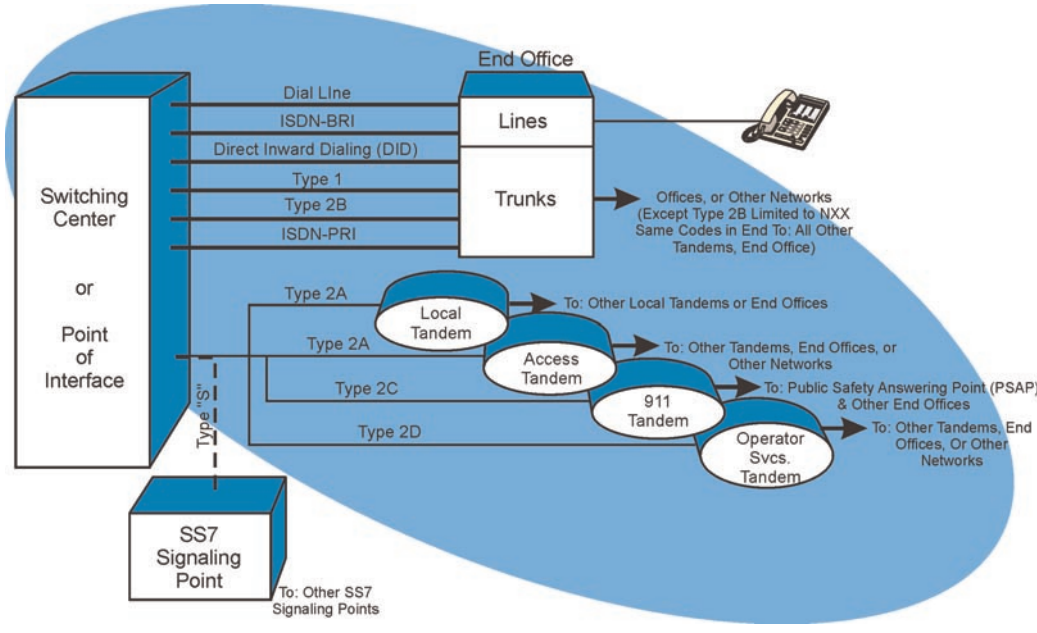

Figure 1.6, Private to Public Telephone System Interconnection

Common Channel Signaling (SS7)

The signaling system #7 (SS7) is an international standard network signaling protocol that allows common channel (independent) signaling between telephone network elements. SS7 system protocols are optimized for telephone system control connections and they are only directly accessible to telephone network operators.

Common channel signaling (CCS) is a separate signaling system that separates content of telephone calls from the information used to set up the call (signaling information). When call-processing information is separated from the communication channel, it is called “out-of-band” signaling. This signaling method uses one of the channels on a multi-channel network for the control, accounting, and management of traffic on all of the channels of the network.

An SS7 network is composed of service switching points (SSPs), signaling transfer points (STPs), and service control points (SCPs). The SSP gathers the analog signaling information from the local line in the network and converts the information into a digital SS7 signaling message. These messages are transferred into the SS7 network to STPs that transfer the packet closer to its destination. When special processing of the message is required such as routing a call to a call forwarding number, the STP routes a query to a SEP. The SCP is a database that can use the incoming message to determine other numbers and features that are associated with this particular call.

In the SS7 protocol, an address, such as customer-dialed digits, does not contain explicit information to enable routing in a signaling network. It then will require the signaling connection control part (SCCP) translation function. This is a process in the SS7 system that uses a routing tables to convert an address (usually a telephone number) into the actual destination address (forwarding telephone number) or into the address of a service control point (database) that contains the customer data needed to process a call.

Intelligence in the network can be distributed to databases and information processing points throughout the network because the network uses common channel signaling A set of service development tools has been developed to allow companies to offer advanced intelligent network (AIN) services.

Figure 1.7 shows the basic structure of the SS7 control signaling system. This diagram shows that a customer's telephone is connected to a local switch. The local switch converts the dialed digits to a SS7 signaling message. The SS7 network routes the control packet to its destination using its own STP data packet switches and separate interconnection lines. In some cases, when additional services are provided, SCPs are used to process requests for advanced telephone services. This diagram also shows that the connections used for signaling are different than the voice connections. There are multiple redundant links between switches, switching points, and network databases.

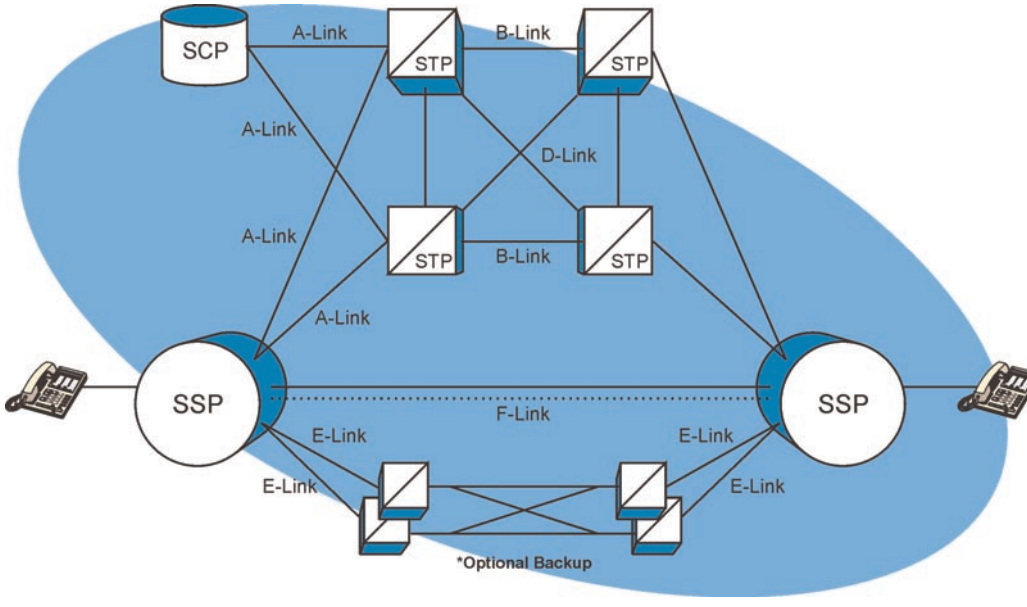

Figure 1.7, Signaling System 7 (SS7) Network

SS7 and Internet Protocol (IP) Signaling Systems

SS7 messages can be directly transported over IP networks or the functional equivalent of SS7 control message can be sent as control messages (e.g. text based messages) directly between elements connected to a data network (e.g. the Internet).

Figure 1.8 shows that SS7 signaling systems can be interconnected with voice over data networks and that SS7 messages can be transported over the Internet protocol. This diagram shows that analog and digital telephones are connected to the PSTN. To interconnect these telephones to voice over data network telephones, the media portion of each communication session is routed through a media gateway where it is converted from the PSTN circuit switched form to a IP packet data media format (packetized voice.) This diagram shows that the packet media can be routed through a data network

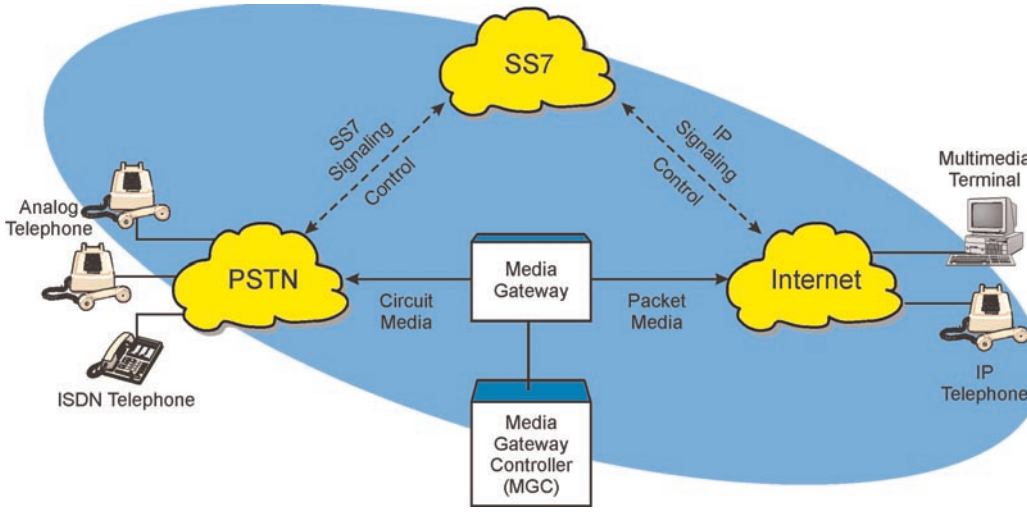

Figure 1.8, Hybrid SS7 and Internet Protocol Network

(e.g. Internet) to an endpoint communication terminal such as a multimedia computer or an IP telephone. This diagram also shows that the SS7 network can control the PSTN through SS7 signaling messages and it can communicate to the media gateway through IP signaling messages.

Advanced Intelligent Networks (AIN)

Advanced intelligent networks (AIN's) are telecommunications networks that are capable of providing advanced services through the use of distributed databases that provide additional information to call processing and routing requests.

In the mid 1980's, Bellcore (now Telcordia) developed a set of software development tools to allow companies to develop advanced services for the telephone network [5]. The advanced intelligent network (AIN) is a combination of the SS7 signaling network, interactive database nodes, and development tools that allow for the processing of signaling messages to provided for advanced telecommunications services.

The AIN system uses a service creation environment (SCE) to create advanced applications. The SCE is a development tool kit that allows the creation of services for an AIN that is used as part of the SS7 network. Using AIN, SS7 control messages can interact with signaling end point (SEP) databases that are connected to SSPs.

A service management system (SMS) is the interface between applications and the SS7 telephone network. The SMS is a computer system that administers service between service developers and signal control point databases in the SS7 network. The SMS system supports the development of intelligent database services. The system contains routing instructions and other call processing information.

To enable SCPs to become more interactive, intelligent peripherals (IPs) may be connected to them. IPs is a type of hardware device that can be programmed to perform an intelligent network processing for the SCP data-

base. IPs perform processing services such as interactive voice response (IVR), selected digit capture, feature selection, and account management for prepaid services.

To help reduce the processing requirements of SCP databases in the SS7 network, adjunct processors (APs) may be used. APs provide some of the database processing services to local switching systems (SSPs).

Figure 1.9 shows the basic structure of the AIN. Companies that want to enable information services use the SMS to interface to SCP databases within the SS7 network. This diagram shows how a prepaid calling card company manages information in a signaling end point (SEP) database. The SEP database communicates to the SS7 network through a SSP. SCE tool kit.

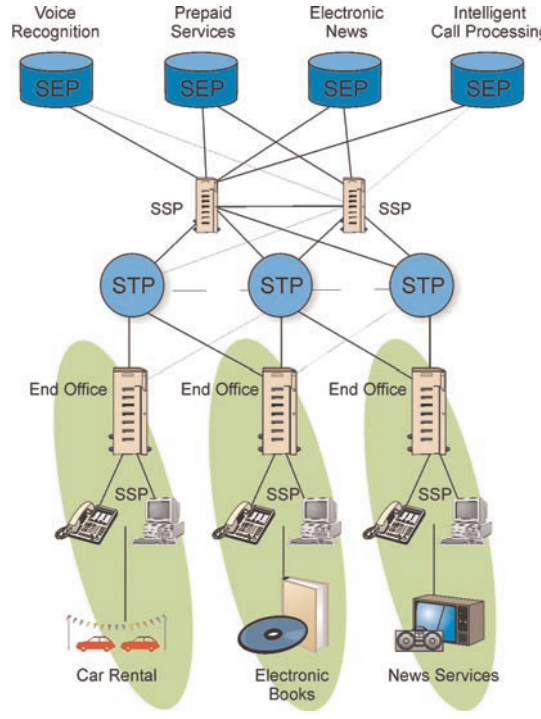

Figure 1.9, Advanced Intelligent Network (AIN)

The SEP is connected to an interactive voice response (IVR) unit that prompts callers to enter the personal identification number (PIN). The IP then reviews the account and determines available credit remains and informs the SS7 network of the destination number for call routing.

Systems

Some of the key systems used in public telephone networks are POTS, ISDN, DLC, APON, and DSL. POTS systems provide basic telephone service (dialtone). ISDN provides for multi-channel digital telephone service. DLC is a concentration system that is used to extend the switching function of the EO to be closer to the end customers. APON is an efficient high-speed data communication system that provides data transfer through the use of fiber lines. DSL service provides high-speed data transmission through the use of standard copper wire pairs.

Plain Old Telephone Service (POTS)

Basic telephone service without any enhanced features. It is the common term for residential telephone service. The POTS system uses in-band signaling tones and currents to determine call status (e.g., call request). Because POTs allows for transfers of audio signals below 8 kilohertz, the digital switching equipment does not allow digitalization of a voice call above 8 kilohertz and therefore restricts the bandwidth that is available on dialed up calls. For this reason POTs systems can accommodate data speeds up to 56 kilobits of data transmission and is the limitation for dial-up modem calls on the network.

Integrated Digital Services Network (ISDN)

A structured all digital telephone network system that was developed to replace (upgrade) existing analog telephone networks. The ISDN network supports for advanced telecommunications services and defined universal standard interfaces that are used in wireless and wired communications systems.

ISDN provides several communication channels to customers via local loop lines through a standardized digital transmission line. ISDN is provided in two interface formats: a basic rate (primarily for consumers) and high-speed rate (primarily for businesses). The basic rate interface (BRI) is 144 kbps and is divided into three digital channels called 2B + D. The primary rate interface (PRI) is 1.54 Mbps and is divided into 23B + D. The digital channels for the BRI are carried over a single, unshielded, twisted pair, copper wire and the PRI is normally carried on (2) twisted pairs of copper wire. The primary rate also allows for the situation where there are multiple PRIs terminated at a particular customer for a facility that is known as non-facility associate signaling so that in the case of a customer who has 10 PRIs it would be normal to expect that 10 DS0s would be dedicated for signaling other than the 10 PRIs. With non-facility associated signaling, signaling channels of 1PR can accommodate the signaling requirements for the other associated PRI trunk route that's serving that customer so the minimum number of signaling channels that are required for those 10 PRIs would be 2. The reason there would be 2 at a minimum is to accommodate redundancy in the event that one signaling channel faltered for that trunk group.

The "B" channels operate at 64kb per second digital synchronous rate and the "D" channel is a control channel. The D channel is used to coordinate (signal) the communication with the telephone network. When used on the BRI line, the D channel is 16kbps and when provided on the PRI channel, the D channel is 64 kbps. Because the amount of telephone system control signaling is relatively small, the D channel can also be used for low speed packet data messaging. The 64 kbps "B" channels can be used for voice and data. On the BRI system, the two B channels can be combined for 128 kbps data connection.

ISDN telephone lines exclusively use digital transmission. This requires a customer to replace their analog telephones with ISDN digital telephone equipment if they upgrade to ISDN service. ISDN service is typically provided using modular plugs. These plugs include a RJ45 interface (8 pin) for data equipment (called a BRI-S/T) and the other physical connection type is a two-wire, RJ11 type standard (called the BRI-U).

The maximum distance for a BRI-S/T line is approximately 3,000 feet and the maximum distance for the BRI-U is 18,000 feet. Beyond these distances, the service provider may install repeaters to provide service. However, repeaters are expensive to install and setup.

The ISDN BRI allows the user to change the use of the B channels whenever desired. For example, an ISDN user may be sending data using the two B channels at 128 Kbps. If a voice call comes in or is initiated, the data transmission is not interrupted; but is automatically reduced to one B channel at 64 Kbps. When the voice call ends, the data transmission returns to 128 Kbps on the two B channels.

Figure 1.10 provides the different interfaces that are available in the integrated services digital network (ISDN). The two interfaces shown are BRI and PRI. These are all digital interfaces from the PSTN to the end customers network termination. 1 (NT1) equipment devices that are ISDN compatible can directly connect to the NT1 connection. Devices that require other standards (such as POTS or data modems) require a terminal adapter (TA).

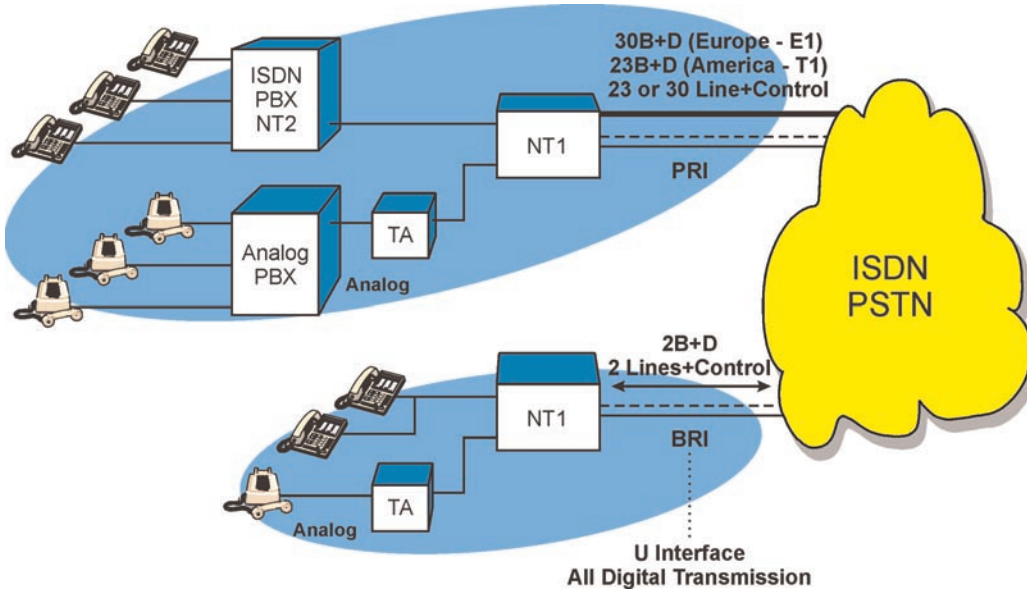

Figure 1.10, Integrated Digital Services Network (ISDN)

Digital Subscriber Line (DSL)

Digital subscriber line is the transmission of digital information, usually on a copper wire pair. Although the transmitted information is in digital form, the transmission medium is usually an analog carrier signal (or the combination of many analog carrier signals) that is modulated by the digital information signal.

A DSL network is composed of several key parts; this includes a local access line provider, DSL access provider, backbone network aggregator, ISP provider, and other media providers. DSL services can be provided by a single service provider or may result from the combination of processes from different service providers. The communication network can be divided into several parts; local access lines (copper), voice communications network (PSTN), high-speed digital subscriber line (DSL), aggregator (interconnec-

tion), Internet service provider (ISP) and content provider (media source). These network parts and the service providers who operate them, must interact to provide most DSL services.

The physical parts of a DSL network include a subscriber access device, network access lines and digital subscriber line access module (DSLAM). There are many configuration options for a DSL network. They vary from a simple end-user's modem bridge that connects a single end-user's computer to the DSL network to complex multi-channel, asynchronous transfer mode (ATM) systems that connect routers and set-top boxes.

Figure 1.11 shows that end user equipment of a DSL network adapts, or converts analog and digital signals to a high-speed DSL transmission signal via a DSL modem (an ATU-R for an ADSL system). The copper wire carries this complex DSL signal to a DSL modem at that connects to the central

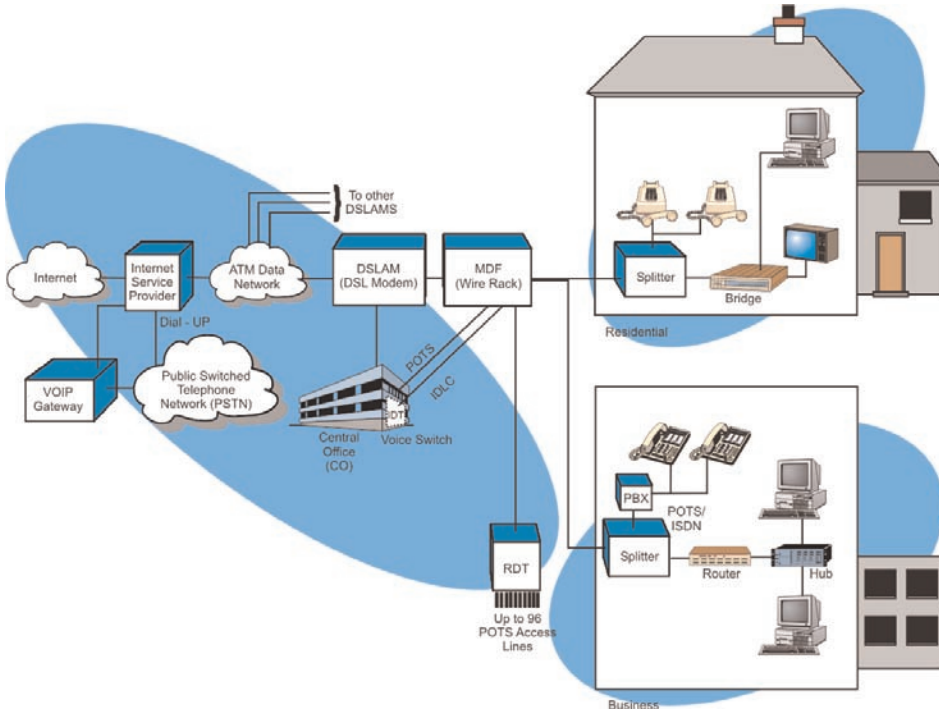

Figure 1.11, DSL Network Diagram

office (an ATU-C for an ADSL system) where it is converted back to its analog and digital components. The analog telephone portion of the signal (if any) is routed to the central office switching system. The high-speed digital portion is routed to a digital subscriber line access multiplexer (DSLAM). The DSLAM combines (concentrates) the signals from several ATU-Cs and converts and routes the signals to the appropriate service provider network.

Digital Loop Carrier (DLC)

Digital loop carrier (DLC) is a high efficiency digital transmission system that uses existing distribution cabling systems to transfer digital information between the telephone system (central office) and a telephone or other communication device. There are two types of DLC: universal digital loop carrier (UDLC) and integrated digital loop carrier (IDLC).

The UDLC is a system that consists of RDTs and central office terminals (COTs). Optical systems such as synchronous optical network (SONET) can transfer signals transparently through the COT to the RDT. The RDT provides an interface between the digital transmission line (e.g., DS1) and the customer's access line. The RDT can dynamically assign time slots from the communication line to customer access lines.

Integrated digital loop carrier (IDLC) is a digital line interface that has been re-engineered to integrate within a switch (usually as card) and shares the internal bus structure of the switch. This function (or card) is called an integrated digital terminal (IDT). Using the IDT, the switch can directly communicate with a remote digital terminal (RDT) that is closer to the end customer using an efficient multi-channel communication line. The RDT provides an interface between the high-speed digital transmission line (e.g., DS1) and the customer's access line. The RDT can dynamically assign time slots from the communication line to customer access lines. Because customer access lines are not used at the same time, an RDT that interfaces to a DS1 line (24 channels) usually provides service to 96 customer access lines.

The key advantages to DLC carrier systems are the cost effective transmission and the ability to rapidly add, delete, or change customer services without having to dispatch an installation technician. The DLC system offers improved efficiency through the use of existing distribution cabling systems. DLC systems also offer the ability to extend the range of access lines from the central office to the end customer as the RDT effectively operates as a repeater.

An RDT is divided into three major parts: digital transmission facility interface, common system interface, and line interface. The digital transmission interface terminates the high-speed line and coordinates the signaling. The common system interface performs the multiplexing/de-multiplexing, signaling, insertion, and extraction. The line interface contains digital to analog conversions (if the access line is analog) or digital formatting (if the line is digital).

DLC initially allowed 40 analog telephone connections to be extended to the remote neighborhoods using a device called an SLC-40. Later an SLC-96 (known as a "slick 96") was put into service that allowed 96 voice grade analog circuits to be extended from the CO on just ten (10) pairs thus reclaiming 86 pairs per installation. Still in use the SLC-96 has allowed the LEC's to conserve much of their installed outside copper infrastructure.

Unfortunately, DLC systems are not transparent to other systems such as DSL systems. Although it is possible to install digital subscriber line network equipment (co-locate) along with RDT equipment, the RDT equipment housings and power supplies were not originally designed to hold additional equipment.

Figure 1.12 shows how an integrated digital loop carrier (IDLC) system can be installed in a local telephone distribution network to allow a 24-channel T1 line to provide service to up to 96 telephone lines. Even though the connecting DS1 has a maximum 24 channels, it is possible to serve up to 96 telephone lines because of the fact of traffic grading. As in any service offering not all customers are on the line simultaneously and with typical concentrations of traffic based on the number of people that are on the phone, 96 telephone lines is a typical level of service provided in a graded environment with a DS1 in between the integrated digital terminal and the trunk interface at the remote digital terminal location. This diagram shows that a switching system has been upgraded to include an IDT and a remote digital terminal (RDT) has been located close to a residential neighborhood. The IDT dynamically connects access lines (actually digital time slots) in the switching system to time slots on the communications line between the IDT and RDT. The RDT is a local switch that can connect to up to 96 residential telephone lines. When a call is to be originated, the RDT connects (locally switches) the residential line to one of the available channels on the DS1 interconnection line. The IDT communicates with the RDT using the GR-303 standard.

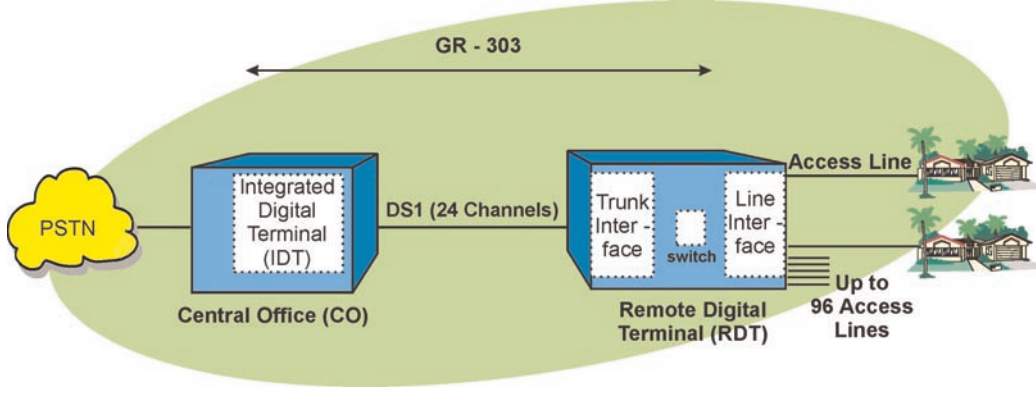

Figure 1.12, Integrated Digital Loop Carrier (IDLC)

Passive Optical Network (PON)

A passive optical network (PON) combines, routes, and separates optical signals through the use of passive optical filters that separate and combine channels of different optical wavelengths (different colors). The PON distributes and routes signals without the need to convert them to electrical signals for routing through switches.

PON networks are constructed of optical line termination (OLT), optical splitters and optical network units (ONUs). OLTs interface the telephone network to allow multiple channels to be combined to different optical wavelengths for distribution through the PON. Optical splitters are passive devices that redirect optical signals to different locations. ONU's terminate or sample optical signals so they can be converted to electrical signals in a format suitable for distribution to a customer's equipment. When used for residential use, a single ONU can server 128 to 500 dwellings. In 2001, most PON's used ATM cell architecture for their transport between the provider EO or point of presence (POP) and the ONU (in some case even to the user workstation). When ATM protocol is combined with PON system, it is called ATM passive optical network (APON).

Figure 1.13 shows an ATM passive optical network (APON) system that locates optical network units (ONUs) near residential and business locations. This passive optical network routes different optical signals (different wavelengths) to different areas in the network by using optical splitters instead of switching devices. In this example, the optical distribution system uses ATM protocol to coordinate the PON. ONU interfaces are connected via fiber to an OLT located at the provider's EO or POP. Each ONU multiplexes user channels (between 12 and 40) into an optical frequency spectrum allocated to that ONU. Up 32 ONU's can share access to a single PON using the features of dense wave division multiplexing (DWDM). Some newer PON's use high-density wave division multiplexing (HDWDM). Use of HDWDM increases the number of ONU's per PON from 32 to 64. This diagrams shows that a PON that uses HDWDM can support approximately 2500 residential customers.

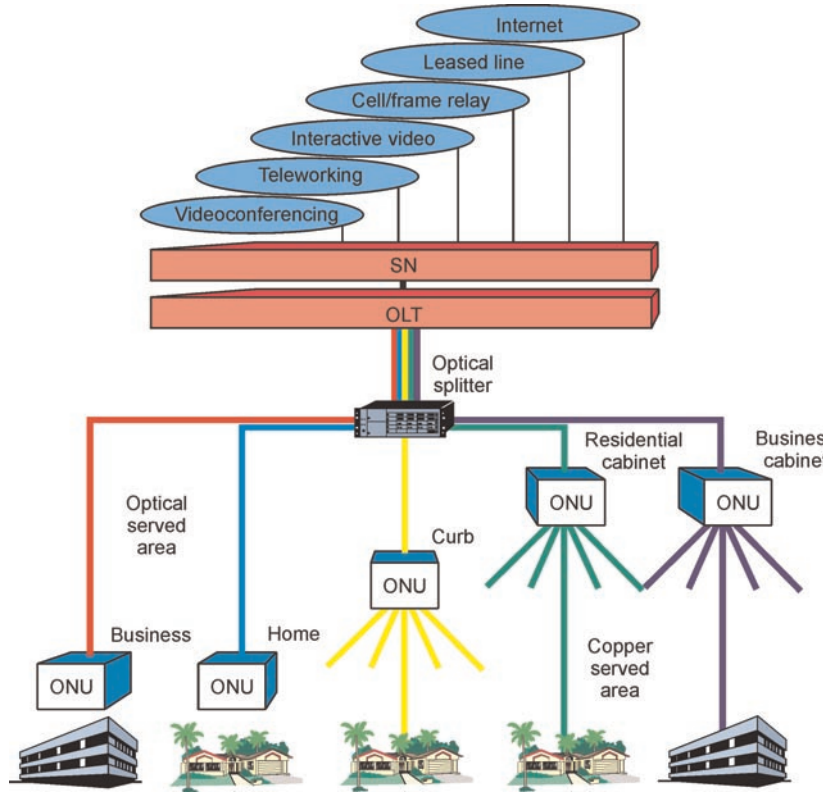

Figure 1.13, Passive Optical Network (PON)

Services

The key services provided in public switched telephone networks include voice (audio bandpass), Centrex, switched data communications service, leased line, and digital subscriber line.

Voice

Voice service is the providing of audio communication circuits that can pass analog frequencies below 3.3 kHz. Voice service is commonly called plain old telephone service (POTS).

The newer EO switches have enhanced voice services to allow residential customers to have practically all the features normally associated with PBX's that serve businesses such as: call waiting, distinctive ringing, voice mail (with signaling or stutter dial tone), feature telephones, and incoming WATS. Some of the newer features are packaged (bundled) together so their actual cost is not readily known.

Figure 1.14 shows the cost of local telephone service in the United States and that the costs are based on a recurring charge with unlimited usage. The customer may also pay additional recurring fees for advanced services. This chart shows that for the past decade, the cost of a residential telephone line in the United States has remained fairly constant at approximately $20 per month.

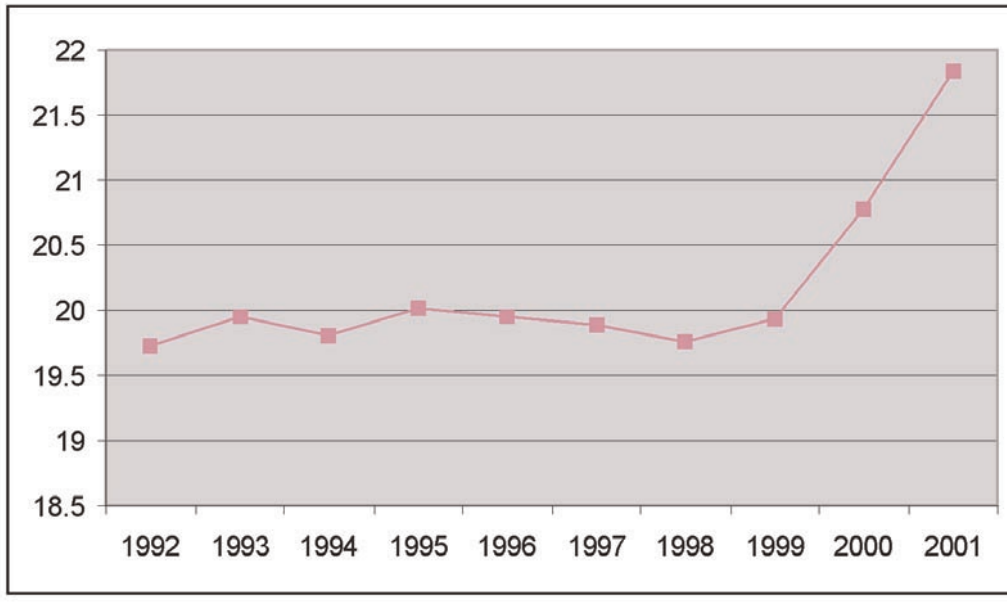

Figure 1.14, Cost of Residential Local Telephone Service in the United States

Source: Federal Communications Commission (FCC)

Outside the United States, the cost structure for local telephone service is often based on actual usage with charges for each minute used ranging from 2 to 6 cents per minute.

Centrex

Centrex is a service offered by a local telephone service provider (primarily to businesses) that allows the customer to have features that are typically associated with a PBX. These features include 3 or 4 digit dialing, intercom features, distinctive line ringing for inside and outside lines, voice mail, call waiting indication, and others.

Centrex services have had many names over the years, but, whatever the name, the purpose of this offering was always the same: an alternative to customer premises PBX's. Centrex services flourished and still have a place for many large, dispersed entities such as large universities and major medical centers.

One of the major selling points for Centrex is the lack of capital expenditure up front. That coupled with the reliability associated with Centrex due to its location in the telephone company CO have kept Centrex as the primary telephone system in many of the businesses referenced above. PBX's, however, have cut into what was once a quite lucrative market for the telephone companies and are now the rule rather than the exception for business telephone service. This has come about because of inventive ways of funding the initial capital outlay and the significantly lower operating cost of a PBX versus a comparable Centrex offering.

Frame Relay Service

Frame relay is a packet-switching technology that provides dynamic bandwidth assignments. Frame relay systems are a simple bearer (transport only) technology and do not offer advanced error protection or retransmission. Frame relay were developed in the 1980s as a result of improved digi-

tal network transmission quality that reduced the need for error protection. Frame relay systems offer dynamic data transmission rates through the use of varying frame sizes.

Figure 1.15 shows an example of the cost structure of frame relay data transmission services. This diagram shows that the user pays an installation fee, a port fee for each access port to the data transmission network, and a monthly usage fee based on the data transmission rate used by the customer.

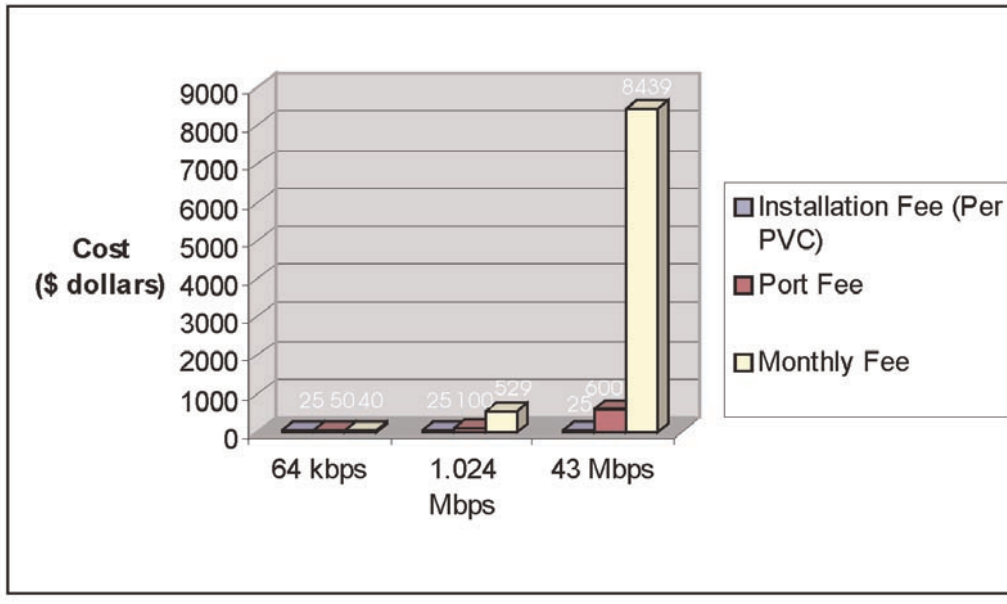

Figure 1.15, Cost of Frame Relay Data Transmission Service
Source: MCI

Leased Lines

Leased lines are telecommunications circuits (either two-wire or four-wire) rented/leased from a telephone company to connect two or more locations on a permanent basis. Leased lines are normally associated with data services or voice PBX tie line services. Leased lines are ordered as either analog or digital circuits. Analog circuits provide a single full duplex (two-way) path between locations. They terminate in either telephone switches/instruments or in modems. Digital leased lines, on the other hand, terminate in customer service units (CSU's) rather than modems. The cost of leased lines depends on the region of service, specific carrier pricing plan, and on distance (line length). As a result, leased lines often connect the end user to another carrier that interconnects another leased line to allow connection to its destination. As a result, leased line prices are often quoted from the customer's location to an EO or POP of a carrier.

Figure 1.16 shows the typical costs involved in pricing of point-to-point leased lines in the United States. This table shows that average leased line costs for a 56 kbps lines is approximately $240 per month. For a T1 line, the average cost is approximately $900 per month and the monthly cost for a DS3 (45 Mbps) connection is approximately $4800 [6].

Connection Speed	Cost per Month
56 kbps	$240
T1 1.5 Mbps	$900
T3 45 Mbps	$4,800

Figure 1.16, Typical Cost of Leased Line Service in United States

Digital Subscriber Line (DSL)

Digital subscriber line (DSL) service is a data service that offers varying data transmission rates to customer. DSL service usually connects users directly to an Internet service provider (ISP). DSL service is generally lower in cost than leased line cost. The difference between DSL service and leased line service is that DSL service does not usually guarantee a data transmission rate.

Figure 1.17 shows an estimated of cost of DSL service for an ADSL line. This table shows that a customer pays an initial DSL connection fee, purchases or leases a data interface (e.g., router), and pays a monthly subscription of approximately $40 per month.

Monthly	$39.99
Modem	Free
Network Interface Card	$20
Download Speed	1 Mbps to 6 Mbps
Upload Speed	64 kbps to 640 kbps
Installation	$0 to $150

Figure 1.17, Cost of Digital Subscriber Line Service

Future Enhancements

The future enhancements to public switched telephone networks include the conversion from circuit switched systems to packet networks, expanded fiber networks, multimedia services, and soft switching systems.

Packetized Voice

Packetized voice is the process of converting audio signals into digital packet format, transferring these packets through a packet network, reassembling these packets into their original data form, and then recreating the audio signals. This form of communication is commonly called IP Telephony.

By the end of 2001, over 5% of international calls from the United States were over the Internet and more than 9.5% of all inter-exchange telecommunications calls were on managed packet switching networks [7]. Packetized voice transmission allows for key features such as dynamic bandwidth allocation and advanced services. To convert to packetized voice, the EO exchange is either replaced or supplemented by a packet switch.

Various protocols such as session initiation protocol (SIP), H.323, and media gateway control protocol (MGCP) have been developed to permit telephony services to operate on data networks. Several services have come into existence in the United States provided that a customer has his own broadband connection. A SIP protocol service offering allows for a digital to packet or analog to packet converter at the customer's location that a typical standard telephone is attached to. This telephone service completely bypasses the incoming local exchange services in the community.

High-Speed Multimedia Services

A high-speed multimedia services is the term used to describe the delivery of different types of information such as voice, data or video. Communication systems may separately or simultaneously transfer multimedia information. High-speed multimedia usually refers to image based media such as pictures, animation, or video clips. High-speed multimedia usually requires peak data transfer rates of 1 Mbps or more.

The providing (provisioning) of multimedia services requires communication lines that can have multiple channels and each of these channels may have different quality of service (QoS) levels. As a result, many emerging multimedia services are likely to use ATM.

Fiber Distribution Networks

Fiber distribution networks use optical fiber to distribute communication channels from the PSTN to end customers. There are three key distribution networks: fiber to the neighborhood (FTTN), fiber to the curb (FTTC), and fiber to the home (FTTH).

Figure 1.18 show that public telephone networks have growth options. Initially, they are likely to install (FTTN) and use existing copper lines to reach the home. As demand grows for high-speed data communication services, additional fiber may be installed from the node to the curb (FTTC) to replace copper lines. Eventually, to achieve extremely high data rates to the home or business, FTTH or fiber to the basement (FTTB) may be installed.

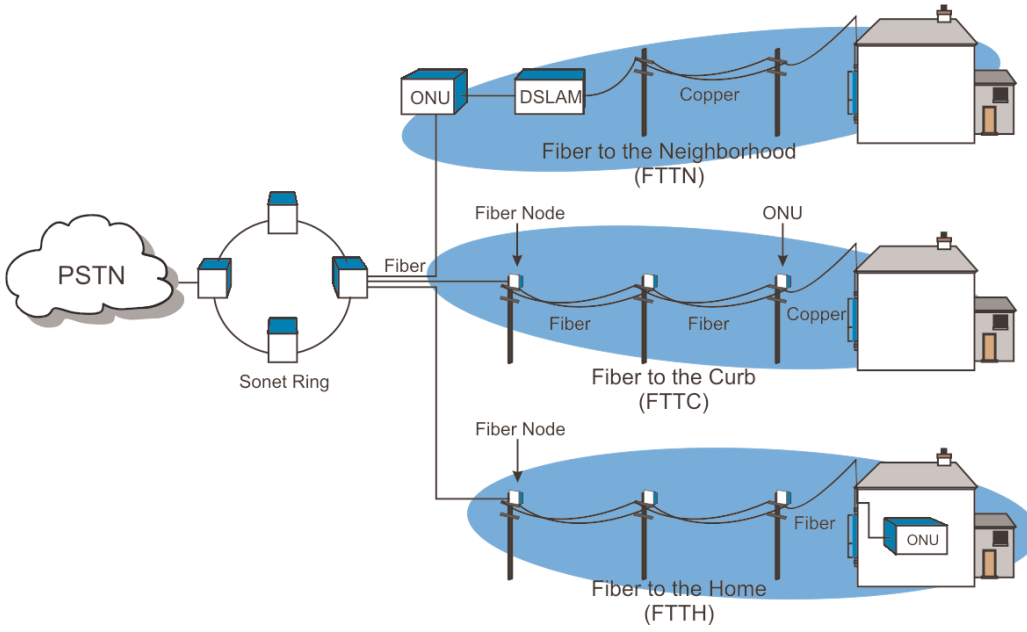

Figure 1.18, Fiber to the Curb (FTTC) System

Softswitches

Softswitches are call control processing devices that can receive call requests for users and assign connections directly between communication devices. Soft switches only setup the connections, they do not actually transfer the call data.

Softswitches were developed to replace existing end office (EO) switches that have limited interconnection capabilities and to transfer the communication path connections from dedicated high-capacity lines to other more efficient packet networks (such as packet data on the Internet). This allows a single softswitch to operate anywhere without the need to be connected to high-capacity trunk connections. Internet Protocol Telephony services are

provided to customers with a converting device that attaches to a broadband connection and plugs into a standard analog telephone at the user's location. Gateway devices which interface the Internet Protocol system to the public switch telephone network are located in strategic markets around the nation such that originating calls from a given community can be done on the IPT system as well as termination of calls anywhere to non-internet protocol telephones is supported. One particular advantage of the service offering is that no matter where you are located on the public internet network your telephone service would operate so it is quite portable and in the event that you want to take your analog to packet conversion box to different locations on the public internet, the service will work without the originating caller understanding that the telephone number that he is dialing is actually not located in the general service area of a particular telephone number. Based on the quality of the broadband service that the customer subscribes to, quality for these types of calls can be very good and at par with public switch telephone network quality and provide additional calling capabilities and functions greater than are available in public switch telephone network services.

References

[1] "Main Telephone Lines," International Telecommunications Union, www.itu.int, 24 April, 2003

[2] "Local Telephone Competition: Status as of December 31, 2001," Federal Communications Commission, July 2002.

[3] Federal Communications Commission "Trends in Telephone Service", December, 2000

[4] Odlyzko, Andrew, "Growth Rate of the Internet" 2001.

[5]. Communications Systems & Networks, Ray Horak, 2000, M&T Press.

Index

SIGMA

Sigma Publishing

Computer Communication Study Guide Series Books

Sr No.	Title
1001	Introduction to Data Networks
1002	Introduction to Transmission Systems
1003	Introduction to Wireless Systems
1004	Introduction to Wireless Technology Basics
1101	Introduction to Private Telephone Systems
1102	Introduction to Paging Systems
1201	Introduction to ATM
1202	Introduction to 802.11 Wireless LAN (WLAN)
1203	Introduction to Signaling System 7 (SS7)
1301	Introduction to Mobile Data
1302	Introduction to Mobile Telephone Systems
1303	Introduction to GSM (Global System for Mobile Communication)
1304	Introduction to GPRS and EDGE
1305	Introduction to Private Land Mobile Radio
1306	Introduction to EVDO
1401	Introduction to Bluetooth
1402	Introduction to CDMA
1403	Introduction to WCDMA
1404	Introduction to Digital Subscriber Line (DSL)
1501	Introduction to IP Telephony Basics
1502	Introduction to IP Telephony Technology
1503	Introduction to SS7 and IP
1504	Introduction to SIP IP Telephony Systems
1505	Introduction to IP Television
1601	Introduction to Optical Communication
1602	Introduction to Satellite Systems